UNIVERSITY OF CAMBRIDGE INTERNATIONAL EXAMINATIONS
General Certificate of Education
Advanced Subsidiary Level and Advanced Level

CANDIDATE NAME									
CENTRE NUMBER						CANDIDATE NUMBER				

4019833956

PHYSICS **9702/23**

Paper 2 AS Structured Questions **October/November 2012**

1 hour

Candidates answer on the Question Paper.

No Additional Materials are required.

READ THESE INSTRUCTIONS FIRST

Write your Centre number, candidate number and name on all the work you hand in.
Write in dark blue or black pen.
You may use a soft pencil for any diagrams, graphs or rough working.
Do not use staples, paper clips, highlighters, glue or correction fluid.
DO **NOT** WRITE IN ANY BARCODES.

Answer **all** questions.
You may lose marks if you do not show your working or if you do not use appropriate units.

At the end of the examination, fasten all your work securely together.
The number of marks is given in brackets [ ] at the end of each question or part question.

For Examiner's Use	
1	
2	
3	
4	
5	
6	
Total	

This document consists of **12** printed pages.

DC (AC/CGW) 43274/5
© UCLES 2012

Data

speed of light in free space, $c = 3.00 \times 10^{8}\ \text{m s}^{-1}$

permeability of free space, $\mu_0 = 4\pi \times 10^{-7}\ \text{H m}^{-1}$

permittivity of free space, $\varepsilon_0 = 8.85 \times 10^{-12}\ \text{F m}^{-1}$

$$\left(\frac{1}{4\pi\varepsilon_0} = 8.99 \cdot\ 10^{9}\ \text{m F}^{-1}\right)$$

elementary charge, $e = 1.60 \times 10^{-19}\ \text{C}$

the Planck constant, $h = 6.63 \times 10^{-34}\ \text{J s}$

unified atomic mass constant, $u = 1.66 \times 10^{-27}\ \text{kg}$

rest mass of electron, $m_e = 9.11 \times 10^{-31}\ \text{kg}$

rest mass of proton, $m_p = 1.67 \times 10^{-27}\ \text{kg}$

molar gas constant, $R = 8.31\ \text{J K}^{-1}\ \text{mol}^{-1}$

the Avogadro constant, $N_A = 6.02 \times 10^{23}\ \text{mol}^{-1}$

the Boltzmann constant, $k = 1.38 \times 10^{-23}\ \text{J K}^{-1}$

gravitational constant, $G = 6.67 \times 10^{-11}\ \text{N m}^2\ \text{kg}^{-2}$

acceleration of free fall, $g = 9.81\ \text{m s}^{-2}$

© UCLES 2012

Formulae

uniformly accelerated motion, $s = ut + \frac{1}{2}at^2$
$v^2 = u^2 + 2as$

work done on/by a gas, $W = p\Delta V$

gravitational potential, $\phi = -\frac{Gm}{r}$

hydrostatic pressure, $p = \rho gh$

pressure of an ideal gas, $p = \frac{1}{3}\frac{Nm}{V}\langle c^2 \rangle$

simple harmonic motion, $a = -\omega^2 x$

velocity of particle in s.h.m., $v = v_0 \cos \omega t$
$v = \pm \omega \sqrt{(x_0^2 - x^2)}$

electric potential, $V = \frac{Q}{4\pi\varepsilon_0 r}$

capacitors in series, $1/C = 1/C_1 + 1/C_2 + \ldots$

capacitors in parallel, $C = C_1 + C_2 + \ldots$

energy of charged capacitor, $W = \frac{1}{2}QV$

resistors in series, $R = R_1 + R_2 + \ldots$

resistors in parallel, $1/R = 1/R_1 + 1/R_2 + \ldots$

alternating current/voltage, $x = x_0 \sin \omega t$

radioactive decay, $x = x_0 \exp(-\lambda t)$

decay constant, $\lambda = \frac{0.693}{t_{\frac{1}{2}}}$

© UCLES 2012

[Turn over

Answer **all** the questions in the spaces provided.

1 **(a)** The spacing between two atoms in a crystal is 3.8×10^{-10} m. State this distance in pm.

spacing = ... pm [1]

(b) Calculate the time of one day in Ms.

time = ... Ms [1]

(c) The distance from the Earth to the Sun is 0.15 Tm. Calculate the time in minutes for light to travel from the Sun to the Earth.

time = ... min [2]

(d) Underline all the vector quantities in the list below.

distance energy momentum weight work [1]

© UCLES 2012

(e) The velocity vector diagram for an aircraft heading due north is shown to scale in Fig. 1.1. There is a wind blowing from the north-west.

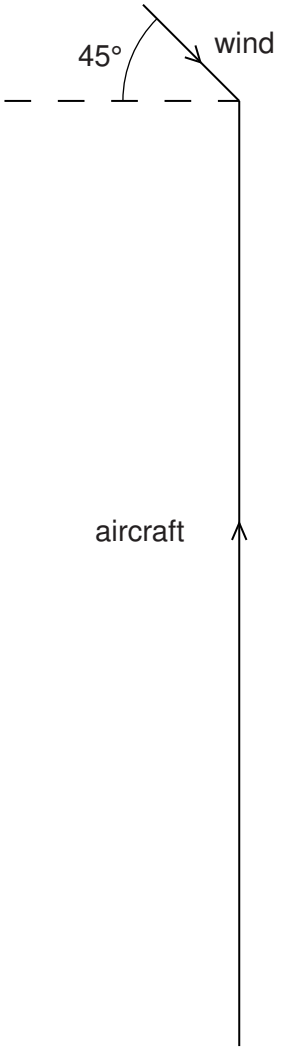

Fig. 1.1

The speed of the wind is $36\,m\,s^{-1}$ and the speed of the aircraft is $250\,m\,s^{-1}$.

(i) Draw an arrow on Fig. 1.1 to show the direction of the resultant velocity of the aircraft. [1]

(ii) Determine the magnitude of the resultant velocity of the aircraft.

resultant velocity = ... $m\,s^{-1}$ [2]

© UCLES 2012

2 Two planks of wood AB and BC are inclined at an angle of 15° to the horizontal. The two wooden planks are joined at point B, as shown in Fig. 2.1.

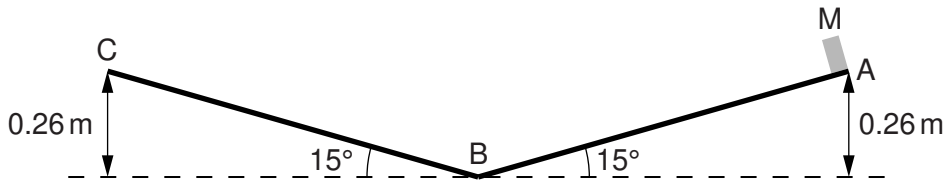

Fig. 2.1

A small block of metal M is released from rest at point A. It slides down the slope to B and up the opposite side to C. Points A and C are 0.26 m above B. Assume frictional forces are negligible.

(a) (i) Describe and explain the acceleration of M as it travels from A to B and from B to C.

.....

.....

.....

..... [3]

(ii) Calculate the time taken for M to travel from A to B.

time = ... s [3]

(iii) Calculate the speed of M at B.

speed = ... $m\,s^{-1}$ [2]

(b) The plank BC is adjusted so that the angle it makes with the horizontal is 30°. M is released from rest at point A and slides down the slope to B. It then slides a distance along the plank from B towards C.

Use the law of conservation of energy to calculate this distance. Explain your working.

distance = ... m [2]

© UCLES 2012

3 **(a)** Define *power*.

.....

..... [1]

(b) A cyclist travels along a horizontal road. The variation with time t of speed v is shown in Fig. 3.1.

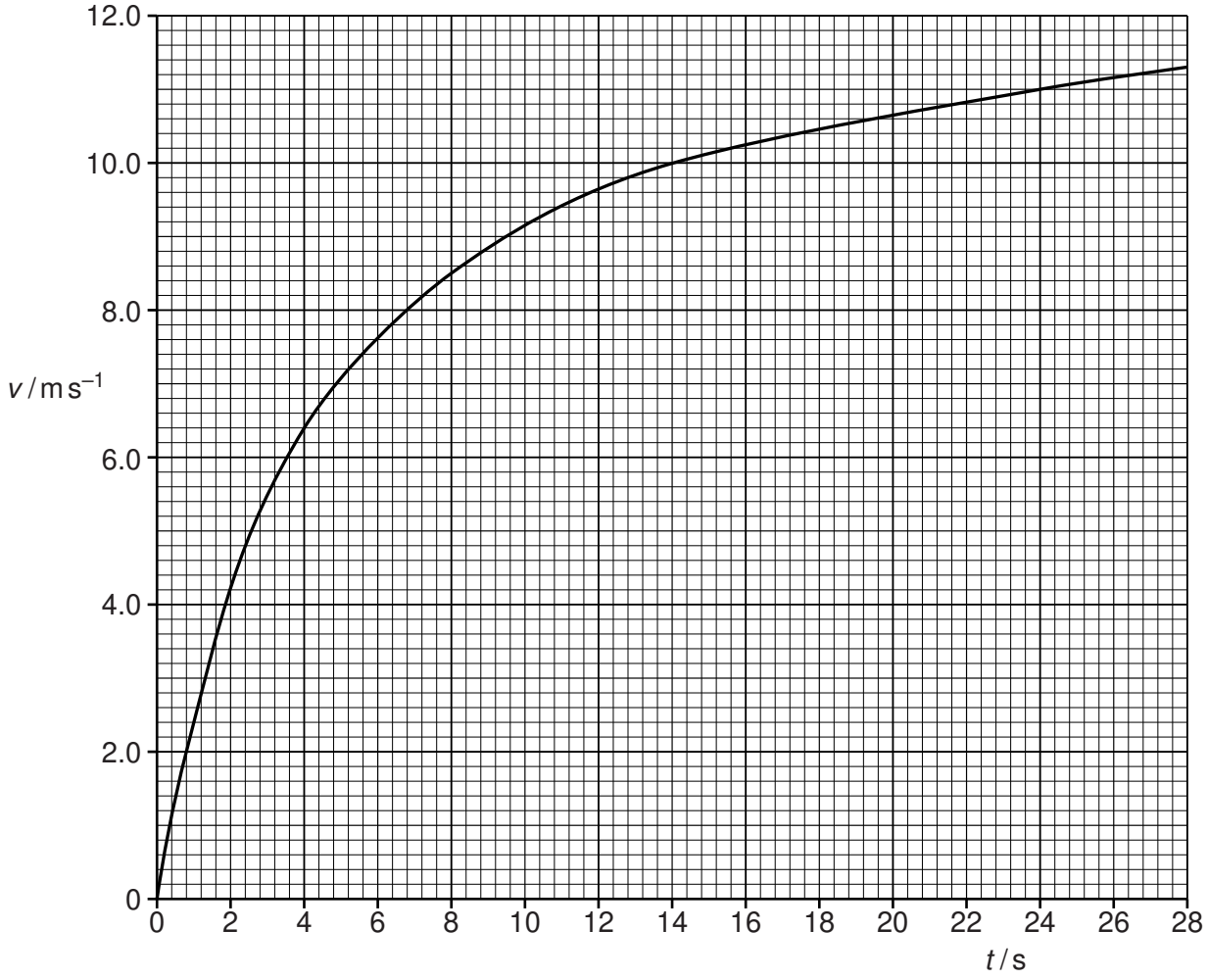

Fig. 3.1

The cyclist maintains a constant power and after some time reaches a constant speed of $12\,m\,s^{-1}$.

(i) Describe and explain the motion of the cyclist.

.....

.....

.....

.....

..... [3]

(ii) When the cyclist is moving at a constant speed of $12\,m\,s^{-1}$ the resistive force is 48 N. Show that the power of the cyclist is about 600 W. Explain your working.

[2]

(iii) Use Fig. 3.1 to show that the acceleration of the cyclist when his speed is $8.0\,m\,s^{-1}$ is about $0.5\,m\,s^{-2}$.

[2]

(iv) The total mass of the cyclist and bicycle is 80 kg. Calculate the resistive force R acting on the cyclist when his speed is $8.0\,m\,s^{-1}$. Use the value for the acceleration given in **(iii)**.

R = ... N [3]

(v) Use the information given in **(ii)** and your answer to **(iv)** to show that, in this situation, the resistive force R is proportional to the speed v of the cyclist.

[1]

© UCLES 2012

4 A circuit used to measure the power transfer from a battery is shown in Fig. 4.1. The power is transferred to a variable resistor of resistance *R*.

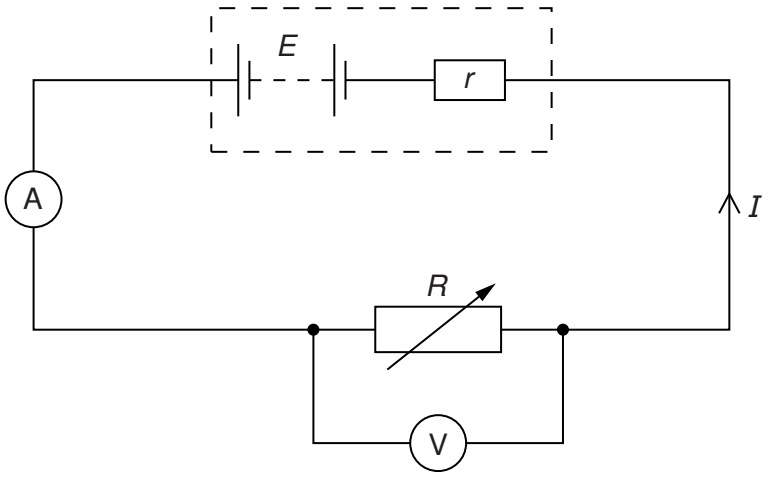

Fig. 4.1

The battery has an electromotive force (e.m.f.) *E* and an internal resistance *r*. There is a potential difference (p.d.) *V* across *R*. The current in the circuit is *I*.

(a) By reference to the circuit shown in Fig. 4.1, distinguish between the definitions of e.m.f. and p.d.

.....

.....

.....

..... [3]

(b) Using Kirchhoff's second law, determine an expression for the current *I* in the circuit.

[1]

© UCLES 2012

(c) The variation with current I of the p.d. V across R is shown in Fig. 4.2.

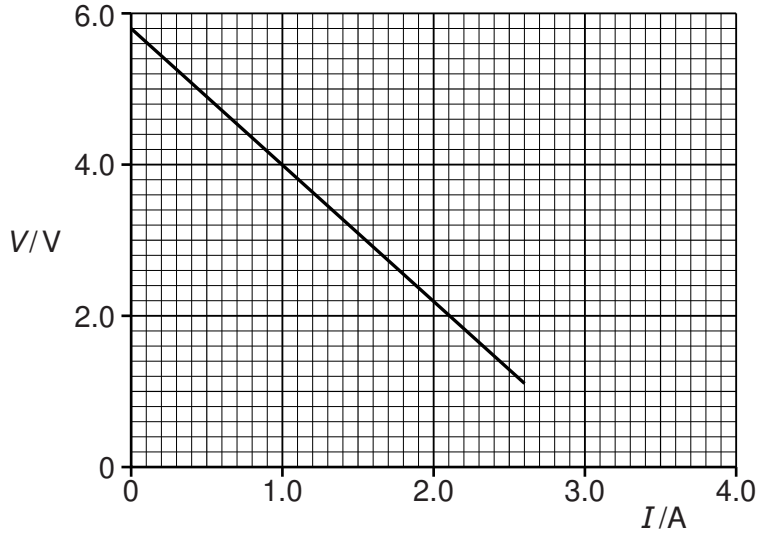

Fig. 4.2

Use Fig. 4.2 to determine

(i) the e.m.f. E,

E = ... V [1]

(ii) the internal resistance r.

r = ... Ω [2]

(d) (i) Using data from Fig. 4.2, calculate the power transferred to R for a current of 1.6 A.

power = ... W [2]

(ii) Use your answers from **(c)(i)** and **(d)(i)** to calculate the efficiency of the battery for a current of 1.6 A.

efficiency = ... % [2]

© UCLES 2012

5 **(a)** State one property of electromagnetic waves that is **not** common to other transverse waves.

..... [1]

(b) The seven regions of the electromagnetic spectrum are represented by blocks labelled A to G in Fig. 5.1.

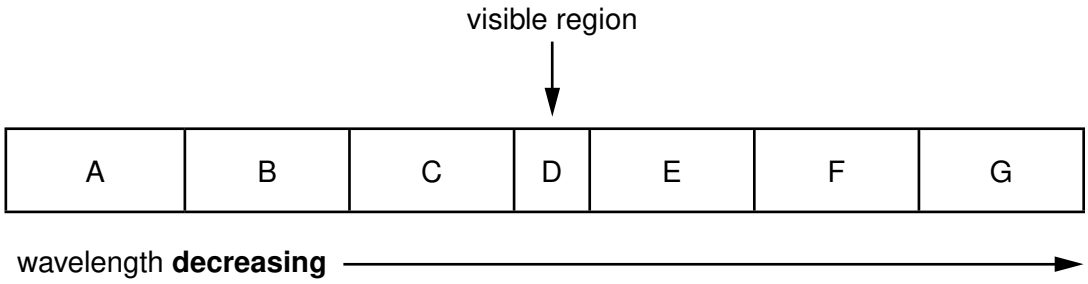

Fig. 5.1

A typical wavelength for the visible region D is 500 nm.

(i) Name the principal radiations and give a typical wavelength for each of the regions B, E and F.

B: name: ..... wavelength: ..... m

E: name: ..... wavelength: ..... m

F: name: ..... wavelength: ..... m
[3]

(ii) Calculate the frequency corresponding to a wavelength of 500 nm.

frequency = ... Hz [2]

(c) All the waves in the spectrum shown in Fig. 5.1 can be polarised. Explain the meaning of the term *polarised*.

.....

.....

.....

..... [2]

6 **(a)** β-radiation is emitted during the spontaneous radioactive decay of an unstable nucleus.

(i) State the nature of a β-particle.

..... [1]

(ii) State two properties of β-radiation.

1. .....

2. .....
[2]

(iii) Explain the meaning of *spontaneous radioactive decay*.

.....

..... [1]

(b) The following equation represents the decay of a nucleus of hydrogen-3 by the emission of a β-particle.

Complete the equation.

$$^{3}_{1}H \rightarrow \,^{\cdots\cdots}_{\cdots\cdots}He + \,^{\cdots\cdots}_{\cdots\cdots}\beta$$ [2]

(c) The β-particle is emitted with an energy of 5.7×10^{3} eV.

Calculate the speed of the β-particle.

speed = ... $m\,s^{-1}$ [3]

(d) A different isotope of hydrogen is hydrogen-2 (deuterium). Describe the similarities and differences between the atoms of hydrogen-2 and hydrogen-3.

.....

.....

..... [2]

Permission to reproduce items where third-party owned material protected by copyright is included has been sought and cleared where possible. Every reasonable effort has been made by the publisher (UCLES) to trace copyright holders, but if any items requiring clearance have unwittingly been included, the publisher will be pleased to make amends at the earliest possible opportunity.

University of Cambridge International Examinations is part of the Cambridge Assessment Group. Cambridge Assessment is the brand name of University of Cambridge Local Examinations Syndicate (UCLES), which is itself a department of the University of Cambridge.

© UCLES 2012